700 E N1 TECHNICAL SPECIFICATIONS

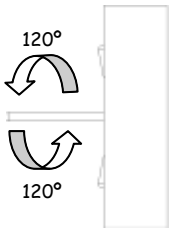

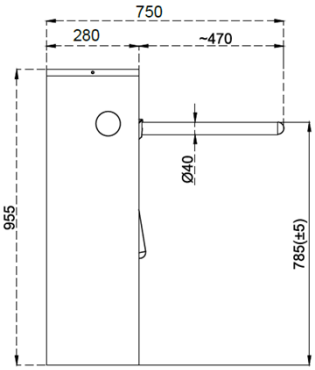

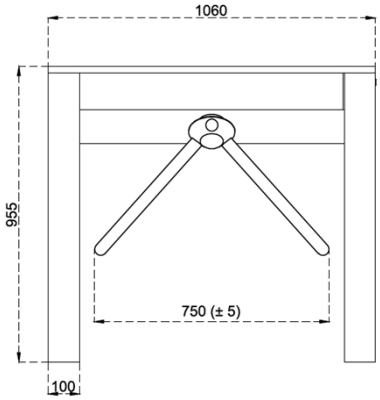

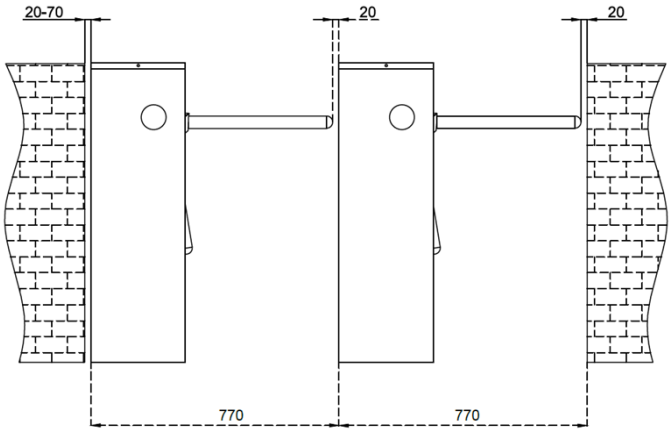

Power Requirements : 110/220V. 60/50Hz. AC (%±10) 24V. DC at standby ~4,4W max. ~12W.

Dimensions : 1060x955x280 + Arm length (470mm)

Arms : Single-sided. Ø40mmx2mm 304-Grade (Opt. 316-Grade) Stainless steel (Opt. anodised hard aluminium). Arms can be dismantled or mounted one by one separately.

Body Features : 304-Grade (Opt. 316-Grade) Stainless steel with orbital brushed matt (opt. satin brushed) surface protected against water for outdoors use.

Indicator Features : Green Arrow & Red Cross LED

Operating Temperature, Humidity, IP Rating
: -20°C to +68°C (Opt. -50°C with heater unit)
RH 95% non-condensing / IP 54 Outdoor Model (Opt. IP 56)

Control System : All inputs are opto-coupler protected .Controlled by dry contact or grounding input. Compatible with all access control systems that provide dry contact or grounding outputs. Optional RS232/RS485/TCP IP control module is available.

Operation : Bi-directional passage, manually (Opt. Motorized) operated system.

700 E N1 TECHNICAL SPECIFICATIONS

Output Data : The system provides dry contact passage feedback by relays.

Emergency Mode : (Standard: Fail Safe); in case of power failure or emergency, the arms rotate freely to allow rapid passage (Opt. Fail-Secure).

Flow Rate : Capacity of Mechanism (Manual System) ~90 passages/minute
Nominal~25 - 46 passage-per-minute (Recommended reference figure)

- **Explanatory Notes:**
  - The above given figures are approximated for one person per walkway or lane.
  - The system allows the new passage authorisation in less than ~0, 3 seconds. After the passage authorization, the total passage time depends on the pushing and passage speed of the people.
  - Utilisation of different access control units can change the flow rate.

Standard Features : Direction and status indicators

Optional Accessory and Applications:
Remote control units, interface unit for PC, RS485, RS232 and LAN, counter, audio-messaging system, motor driven unit, automatic drop (retractable) arm, alarm sensor, heater positive unit, coin slot/intelligent coin system and coin box, card reader pole, pipe barrier (Separator), floor mounting plate, customised top covers to accommodate various accessories.

**Design and specifications are subject to change without notice.*

700 E N1 TECHNICAL SPECIFICATIONS

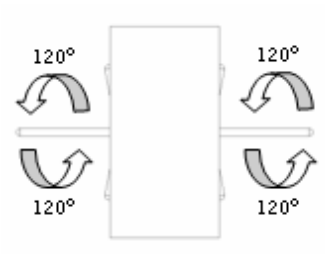

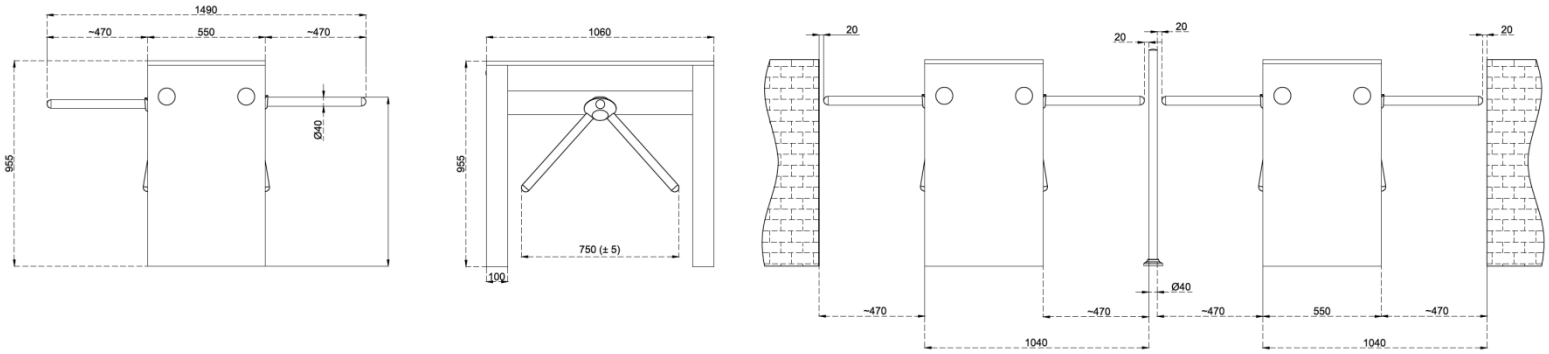

Power Requirements : 110/220V. 60/50Hz. AC (%±10) 24V. DC at standby ~4,4W+~4,4W. max. ~12W+~12W.

Dimensions : 1060x955x550 + arm length (2 x 470mm)

Arms : Double-sided. Ø40mmx2mm 304-Grade (Opt. 316-Grade) Stainless steel (Opt. anodised hard aluminium). Can be dismantled or mounted one by one separately.

Body Features : 304-Grade (Opt. 316-Grade) Stainless steel with orbital brushed matt (opt. satin brushed) surface protected against water for outdoors use.

Indicator Features : Green Arrow & Red Bar LED

Operating Temperature, Humidity, IP Rating
: -20°C to +68°C (Opt. -50°C with heater unit)
RH 95% non-condensing / IP 54 Outdoor Model (Opt. IP 56)

Control System : All inputs are opto-coupler protected .Controlled by dry contact or grounding input. Compatible with all access control systems that provide dry contact or grounding outputs. Optional RS232/RS485/TCP IP control module is available.

Operation : Bi-directional passage, manually (Opt. Motorized) operated system.

700 E N1 TECHNICAL SPECIFICATIONS

Output Data **:** The system provides dry contact passage feedback by relays.

Emergency Mode **:** (Standard: Fail Safe); in case of power failure or emergency, the arms rotate freely to allow rapid passage (Opt. Fail Secure).

Flow Rate **:** Capacity of Mechanism (Manual System) ~90 passages/minute (for double sided 90+90=180) Nominal~25 - 46 passage-per-minute (for double sided=*2) (recommended reference figure).

- **Explanatory Notes:**
  - The above given figures are approximate for one person per walkway or lane.
  - The system allows the new passage authorisation in less than ~0, 3 seconds. After the passage authorization, the total passage time depends on the pushing and passage speed of the people.
  - Utilisation of different access control units can change the flow rate.

Standard Features **:** Direction and status indicators

Optional Accessory and Applications:
Remote control units, interface unit for PC, RS485, RS232 and LAN, counter, audio-messaging system, motor driven unit, automatic drop (retractable) arm, alarm sensor, heater positive unit, coin slot/intelligent coin system and coin box, card reader pole, pipe barrier (Separator), floor mounting plate, customised top covers to accommodate various accessories.

**Design and specifications are subject to change without notice.*

T: +385 1 30 98 900 ,
F: +385 1 30 98 915
E: info@1klik.com.hr,
W: www.1klik.com.hr